TIP PROJECT: R-5771

See Sheet 1-A For Index of Sheets
See Sheet 1-B For Symbology

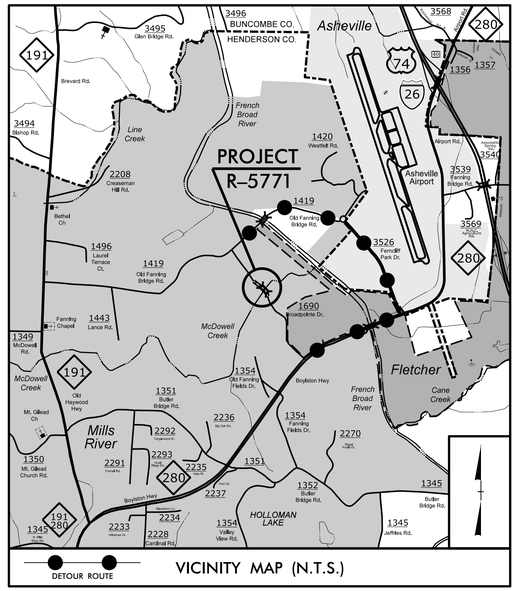

VICINITY MAP (N.T.S.)

STATE OF NORTH CAROLINA
DIVISION OF HIGHWAYS

UTILITIES BY OTHERS PLANS
HENDERSON COUNTY

T.I.P. NO.	SHEET NO.
R-5771	UO-1

NOTE:
ALL UTILITY WORK SHOWN ON THIS SHEET IS DONE BY OTHERS.
NO PAYMENT WILL BE MADE TO THE CONTRACTOR FOR UTILITY WORK SHOWN ON THIS SHEET.

LOCATION: SR 1690 (BROADPOINTE DRIVE) INCLUDING BRIDGE #107 OVER McDOWELL CREEK

TYPE OF WORK: RELOCATION OF POWER AND PHONE

NAD 83/2011

UO-2

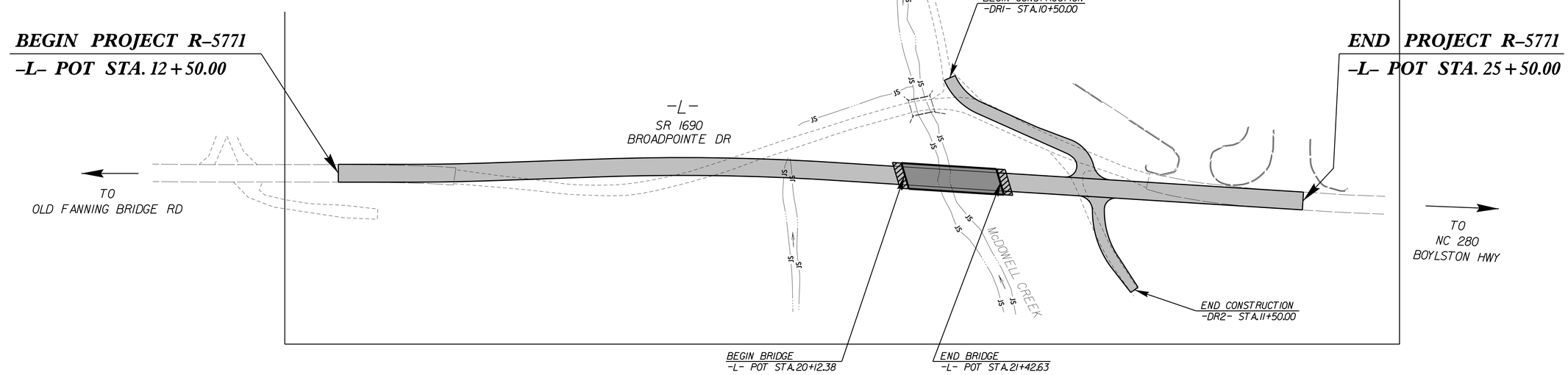

GRAPHIC SCALES

50 25 0 50 100
PLANS

50 25 0 50 100
PROFILE (HORIZONTAL)

10 5 0 10 20
PROFILE (VERTICAL)

INDEX OF SHEETS

SHEET NO.:	DESCRIPTION:
UO-1	TITLE SHEET
UO-2	UBO PLAN SHEET

UTILITY OWNERS WITH CONFLICTS

(A) POWER - DUKE ENERGY
(B) PHONE - AT&T

PREPARED IN THE OFFICE OF:

M A Engineering Consultants, Inc.
598 East Chatham Street - Suite 137
Cary, NC 27511
Phone: 919.297.0220 Fax: 919.297.0221
NC License: F-0160

WEBB WHITE — UTILITY PROJECT MANAGER

DIVISION OF HIGHWAYS
DIVISION 14
4142 HAYWOOD ROAD
MILLS RIVER, NC 28742

STEVE CANNON, PE — DISTRICT ENGINEER
BOB GOLDING — UTILITY COORDINATOR

09/08/99

4/11/2017
F:\Utilities\rdy_ut\proj\R5771LU0_tsh.dgn
2:34:30 PM