DocuSign Envelope ID: 80037108-2E4D-4A39-BE63-BDE673EDF3EA

PROJECT REFERENCE NO.	SHEET NO.
R-5771	2A-1

ROADWAY DESIGN ENGINEER

NORTH CAROLINA PROFESSIONAL SEAL 19814 ENGINEER ROBERT W. PORTER, JR.

DocuSigned by: Robert W. Porter, Jr.
98CF5B6E3A7...
3/28/2017

PAVEMENT DESIGN ENGINEER

PAVEMENT DESIGN PROVIDED BY NCDOT

DOCUMENT NOT CONSIDERED FINAL UNLESS ALL SIGNATURES COMPLETED

M A Engineering Consultants, Inc.
NC License: F-0160
598 East Chatham Street Suite 137 Cary, NC 27511
Phone: 919.297.0220 Fax: 919.297.0221

PAVEMENT SCHEDULE

C1	PROP. APPROX. 2.0" ASPHALT CONCRETE SURFACE COURSE, TYPE S9.5B, AT AN AVERAGE RATE OF 224 Lbs PER SQUARE YARD.
C2	PROP. VAR. DEPTH ASPHALT CONCRETE SURFACE COURSE, TYPE S9.5B, AT AN AVERAGE RATE OF 112 LBS. PER SQ. YARD PER 1" DEPTH, TO BE PLACED IN LAYERS NOT LESS THAN 1.5" OR GREATER THAN 2" IN DEPTH.
D1	PROP. APPROX. 2.5" ASPHALT CONCRETE INTERMEDIATE COURSE, TYPE I19.0B, AT AN AVERAGE RATE OF 285.0 Lbs PER SQUARE YARD.
D2	PROP. VAR. DEPTH ASPHALT CONCRETE INTERMEDIATE COURSE, TYPE I19.0B, AT AN AVERAGE RATE OF 114 LBS. PER SQ. YARD PER 1" DEPTH TO BE PLACED IN LAYERS NOT LESS THAN 2.5" IN DEPTH OR GREATER THAN 4" IN DEPTH.
E1	PROP. APPROX. 4" ASPHALT CONCRETE INTERMEDIATE COURSE, TYPE B25.0B, AT AN AVERAGE RATE OF 456 Lbs PER SQUARE YARD.
E2	PROP. VAR. DEPTH ASPHALT CONCRETE BASE COURSE, TYPE B25.0B, AT AN AVERAGE RATE OF 114 LBS. PER SQ. YARD PER 1" DEPTH TO BE PLACED IN LAYERS NOT LESS THAN 3" IN DEPTH OR GREATER THAN 5.5" IN DEPTH.
F1	ASPHALT SURFACE TREATMENT, MAT & DOUBLE SEAL
J1	8" AGGREGATE BASE COURSE
R1	SHOULDER BERM GUTTER
T	EARTH MATERIAL
U	EXISTING PAVEMENT
W	VARIABLE DEPTH ASPHALT PAVEMENT (SEE STANDARD WEDGING DETAIL THIS SHEET)

PAVEMENT EDGE SLOPES AND TRENCH SLOPES ARE 1:1 UNLESS SHOWN OTHERWISE.

WEDGING DETAIL

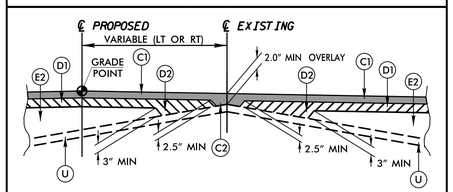

DETAIL SHOWING METHOD OF WEDGING

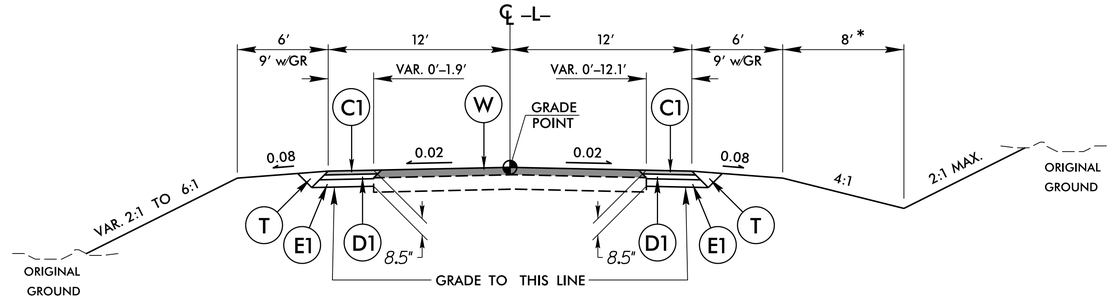

TYPICAL SECTION NO. 1

FROM -L- STA. 12+50.00 TO STA. 13+50.00
FROM -L- STA. 23+50.00 TO STA. 25+50.00

*NOTE: USE 6' DITCH WIDTH AT THE FOLLOWING LOCATIONS:
FROM -L- STA. 12+50.00 TO STA. 14+00.00 LT. & RT.
FROM -L- STA. 25+00.00 TO STA. 25+50.00 RT.

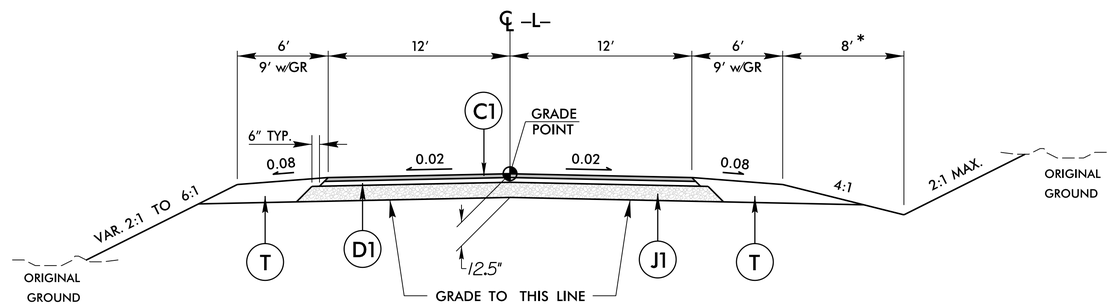

TYPICAL SECTION NO. 2

FROM -L- STA. 13+50.00 TO STA. 20+12.38 (BEGIN BRIDGE)
FROM -L- STA. 21+42.63 (END BRIDGE) TO STA. 23+50.00

USE C1, D1, & J1 TO PAVE SHOULDER AREAS IN FRONT OF GUARDRAIL AT LOCATIONS SHOWN IN PLANS

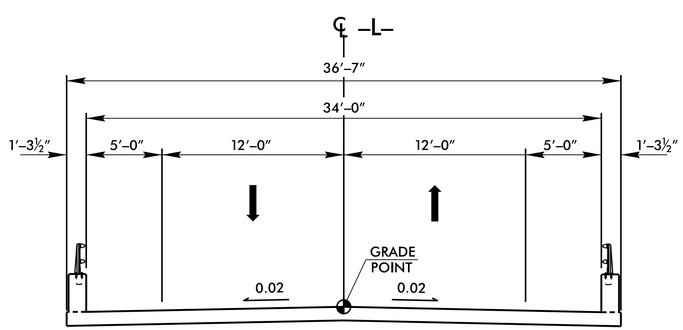

TYPICAL SECTION ON STRUCTURE

FROM -L- STA. 20+12.38 TO STA. 21+42.63

NOTE: USE BICYCLE SAFE 54" HIGH BRIDGE RAIL.

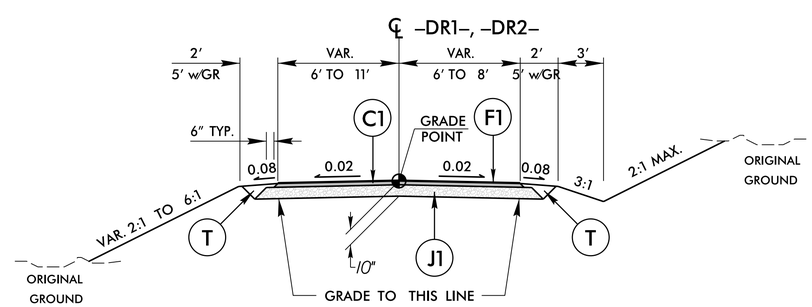

TYPICAL SECTION NO. 3

FROM -DR1- STA. 10+50.00 TO STA. 12+90.73
FROM -DR2- STA. 10+12.00 TO STA. 11+50.00

USE -L- PAVEMENT DESIGN AT THE FOLLOWING LOCATIONS:
FROM -DR1- STA. 12+80.00 TO 12+90.73
FROM -DR2- STA. 10+12.00 TO 10+18.00

SHOULDER BERM GUTTER DETAIL

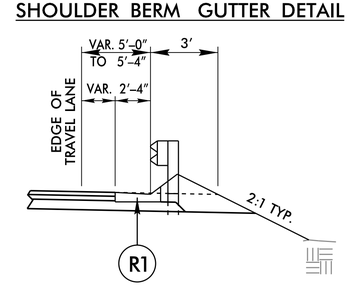

USE SHOULDER BERM GUTTER DETAIL IN CONJUNCTION WITH TYP. SEC. NO. 2

FROM -L- STA. 19+79.00 TO 19+95.25 LT.
FROM -L- STA. 19+79.00 TO 20+07.63 RT.

3/28/2017
12:36:06 PM
C:\pwworking\proj\R5771_Rdy_typ.dgn