DocuSign Envelope ID: 80037108-2E4D-4A39-BE63-BDE673EDF3EA

PROJECT: R-5771

CONTRACT: DN00557

See Sheet 1-A For Index of Sheets
See Sheet 1-B For Symbology

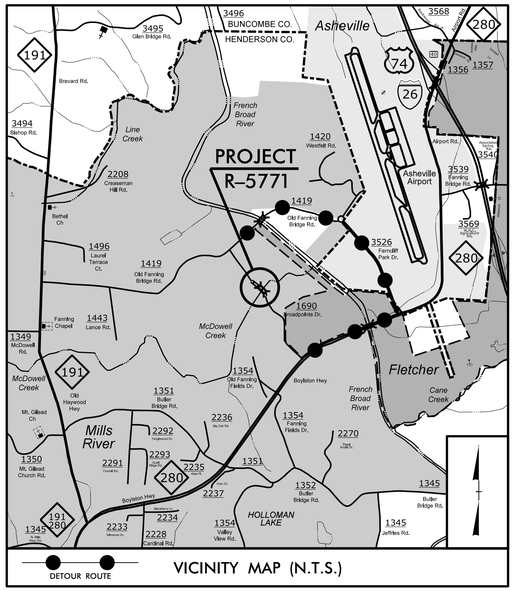

VICINITY MAP (N.T.S.)

STATE OF NORTH CAROLINA
DIVISION OF HIGHWAYS

HENDERSON COUNTY

STATE	STATE PROJECT REFERENCE NO.	SHEET NO.	TOTAL SHEETS
N.C.	R-5771	1	

STATE PROJ. NO.	F.A. PROJ. NO.	DESCRIPTION
46877.1.1	APD-1690(001)	P.E.
46877.2.1	APD-1690(001)	R/W & UTILITIES
46877.3.1	APD-1690(001)	CONST.

LOCATION: SR 1690 (BROADPOINTE DRIVE) INCLUDING BRIDGE #107 OVER McDOWELL CREEK

TYPE OF WORK: GRADING, DRAINAGE, PAVING, AND STRUCTURE

NAD 83/2011

4

BEGIN PROJECT R-5771
-L- POT STA. 12+50.00

END PROJECT R-5771
-L- POT STA. 25+50.00

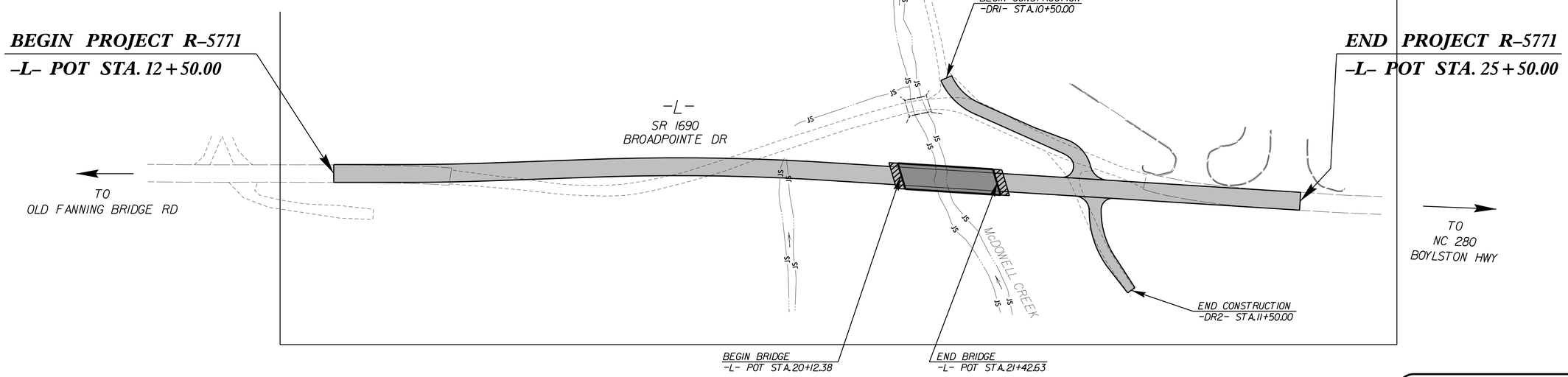

DOCUMENT NOT CONSIDERED FINAL UNLESS ALL SIGNATURES COMPLETED

NCDOT CONTACT:

STEVE CANNON, PE
DISTRICT 1 ENGINEER, DIV. 14
(828) 891-7911

GRAPHIC SCALES

50 25 0 50 100
PLANS

50 25 0 50 100
PROFILE (HORIZONTAL)

10 5 0 10 20
PROFILE (VERTICAL)

DESIGN DATA

ADT 2000 = 120
ADT 2037 = 2,000+
T = 7 %
V = 30 MPH

FUNCTIONAL CLASSIFICATION:
RURAL COLLECTOR

SUB-REGIONAL TIER

PROJECT LENGTH

LENGTH ROADWAY PROJECT R-5771	=	***0.221 mile***
LENGTH STRUCTURES PROJECT R-5771	=	***0.025 mile***
TOTAL LENGTH PROJECT R-5771	=	***0.246 mile***

Prepared For:
DIVISION OF HIGHWAYS
Division 14, 253 Webster Road, Sylva, NC 28779
By:
M A Engineering Consultants, Inc.
598 East Chatham Street - Suite 137
Cary, NC 27511
Phone: 919.297.0220 Fax: 919.297.0221
NC License: F-0160

2012 STANDARD SPECIFICATIONS

RIGHT OF WAY DATE:
DECEMBER 14, 2016

LETTING DATE:
MAY 23, 2017

ROBERT W. PORTER, JR PE
PROJECT ENGINEER

KEVIN S. HUTCHENS PE
PROJECT DESIGN ENGINEER

HYDRAULICS ENGINEER
3/28/2017
DocuSigned by: Scott W. Brookhart
461B108428B4498...
P.E.
SIGNATURE:

NORTH CAROLINA PROFESSIONAL SEAL 20117 ENGINEER SCOTT W. BROOKHART

ROADWAY DESIGN ENGINEER
3/28/2017
DocuSigned by: Robert W. Porter, Jr
9BC7F0B0B7B1445...
P.E.
SIGNATURE:

NORTH CAROLINA PROFESSIONAL SEAL 19814 ENGINEER ROBERT W. PORTER, JR.

STATE OF NORTH CAROLINA DEPARTMENT OF TRANSPORTATION

3/28/2017
5:\roadway\proj\R5771_Rdy_tsh.dgn
3:27:26 PM